TOWER VESSEL MECHANICAL ENGINEERING

TOP DAVIT SELECTION CALCULATION

DESIGN DATA PGM RUN ***V1.0***

* DESCRIPTION	N1		* ITEM NO.	E-001	
		* VESSEL PROPERTIES			
* Shell outside mean-diameter	720	mm	* Shell thickness	13	mm
* Support Pad length, h	300	mm	* Support Pad width,g	350	mm
		* DAVIT PIPE PROPERTIES			
* Material	A53-B		* Allowable strress ,Sa	10.5	Kg,
* Yield Stress, Sy	24.6	Kg/mm^2			
		* LIFTING LOAD & DAVIT PIPE			
* Max. Lifting Capacity, WL	760	Kg	* Vertical Impact Factor	1.5	
* Dlm. "L1"	2400	mm	* Dlm. "L2"	3600	mm
* Dlm. "L3"	250	mm			
		* DAVIT PIPE SIZE			
	8"(200A)		SCH.40		

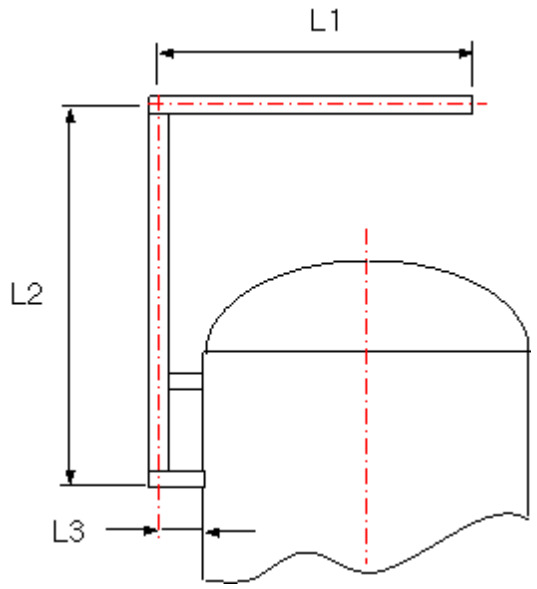

RESULT OF CALCULATION

		* DAVIT PIPE SIZE			
Davit Pipe O.D	219.1	mm	Davit Pipe I.D	202.9	mm
Davit Pipe thickness	8.1	mm			
		* VERTICAL LOAD SUMMARY			
Weight of Davit	151.7	Kg	Weight of Boom	101.2	Kg
Total applied weight on support clip	1,012.9	Kg			

* LOAD ON TOP DAVIT

Vertical Force, Fv=Cv x WL	1,140.0	Kg	Bending Moment in Davit Mast., M1=FvxL1+0.5xWBxL1	2,857,389	Kg·
Axial Load in Davit MAST., P=2xFv+WD	2,432	Kg			

* STRESS in DAVIT

Cross Section Area, A=3.14/4x(D2^2-D1^2)	5,369	mm^2	Moment of Interial, I=1/64x3.14x(D^4-D1^4)	29,924,813	mm
Section Modulus, Z=1/32x3.14x(D2^4-D1^4)/D2	273,161	mm^3	Radious of Gyration, T=(I/A)^0.5	75	mm
Axial Stress in MAST. S1=P/A	0.453	Kg/mm^2	Allowable stress	10.50	Kg/
			Judgement	O.K	
Bending stress in Mast.S2=M1/Z	10.460	Kg/mm^2	Allowable stress	10.50	Kg/
			Judgement	O.K	

* STRESS in SHELL

Parameters of Cylinderical Shell,GAMA=Rm/t	55	C=0.5*(h*g)^0.5	162.0	mm
BETA=C/Rm	0.2250			

* STRESS CALCULATION

Max. Bending Stress,ML=MT*L3	253,223	Kg/mm^2	MBS=CLT*ML/t^2*Rm*BETA	2.589	Kg/
Allowable stress	16.24	Kg/mm^2	Judgement	O.K	

MENU PAGE-->>

Copyright © 2001 피이에스21 All rights reserved.
Please contact E-mail ***pes21@pes21.com***